DocuSign Envelope ID: 01B8FB77-61A8-49BB-9FAB-65E706FEF0DB

*NOTES
NATIVE MATERIAL CONSISTS OF MATERIAL THAT IS EXCAVATED FROM THE THE STREAM OR FLOODPLAIN AT THE PROJECT SITE DURING CONSTRUCTION. NATIVE MATERIAL IS SUBJECT TO APPROVAL BY THE ENGINEER AND MAY BE SUBJECT TO PERMIT CONDITIONS.

ONLY MATERIAL THAT IS EXCAVATED FROM THE STREAM BED MAY BE USED TO LINE THE LOW FLOW CULVERT BARREL. NATIVE MATERIAL BETWEEN SILLS/BAFFLES IN THE CULVERT SHALL PROVIDE A CONTINUOUS LOW FLOW CHANNEL.

RIP–RAP MAY BE USED TO SUPPLEMENT THE NATIVE BED MATERIAL IN THE HIGH FLOW CULVERT BARREL. IF RIP–RAP IS USED TO LINE THE HIGH FLOW CULVERT BARREL, NATIVE MATERIAL SHOULD BE PLACED ON TOP TO FILL VOIDS AND PROVIDE A FLAT SURFACE FOR ANIMAL PASSAGE.

SILLS/BAFFLES ARE TO BE 1.0 FT. WIDE, CAST SEPARATELY AND ATTACHED BY DOWELS.

TOP OF LOW FLOW SILLS/BAFFLES SHOULD MATCH STREAM BED ELEVATION IN LOW FLOW CHANNEL OF STREAM. (THALWEG)

DO NOT SET ELEVATION OF HIGH SILL/BAFFLES ABOVE BANK FULL.

NUMBER OF SILL/BAFFLES DETERMINED BY THE ENGINEER.

PAYMENT REQUIRED TO PLACE THE EXCAVATED MATERIAL OR SUPPLEMENT MATERIAL SHALL BE INCLUDED IN THE CONTRACT LUMP SUM PRICE BID FOR CULVERT EXCAVATION.

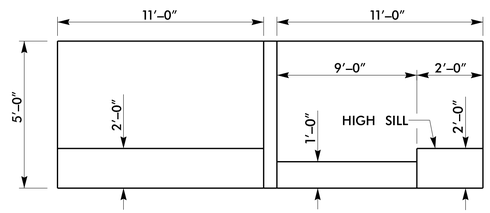

SILLS AT INLET AND OUTLET

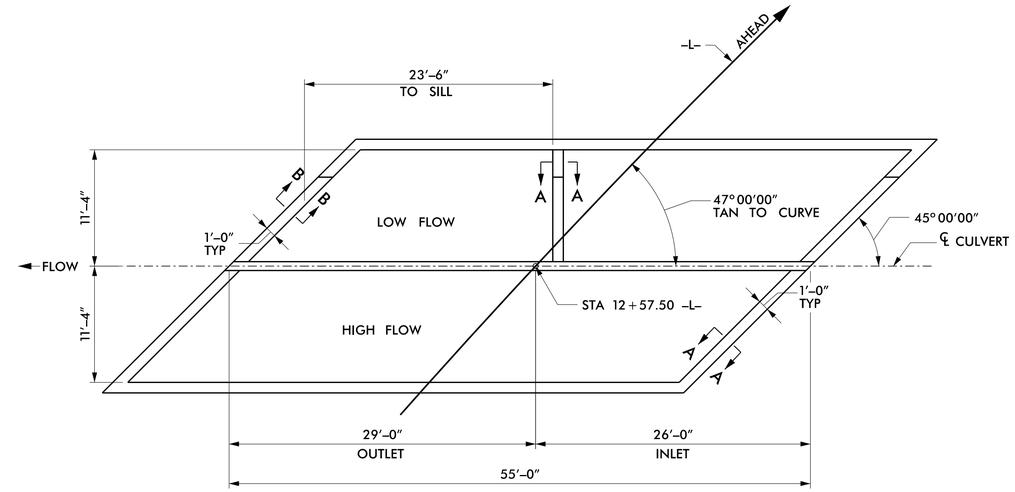

CULVERT SILL LAYOUT

DETAIL

MULTI– BARREL CULVERT LOW FLOW CHANNEL,SILLS AND FLOOD PLAIN BENCH

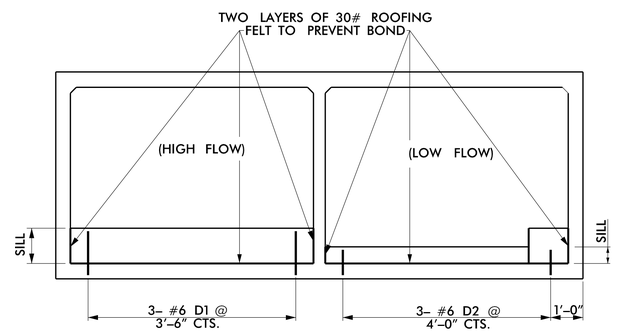

END ELEVATION
LOOKING DOWNSTREAM

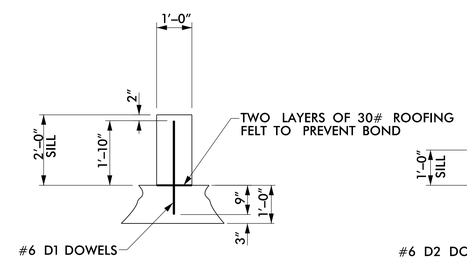

SECTION "A–A"
DOWELS MAY BE PUSHED INTO GREEN CONCRETE AFTER SLAB HAS BEEN FLOATED.

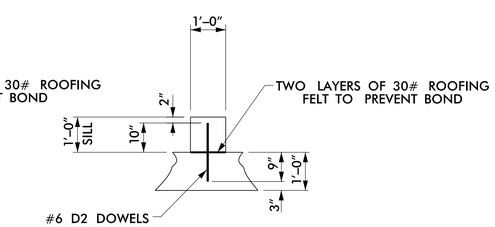

SECTION "B–B"
DOWELS MAY BE PUSHED INTO GREEN CONCRETE AFTER SLAB HAS BEEN FLOATED.

SILL DETAILS

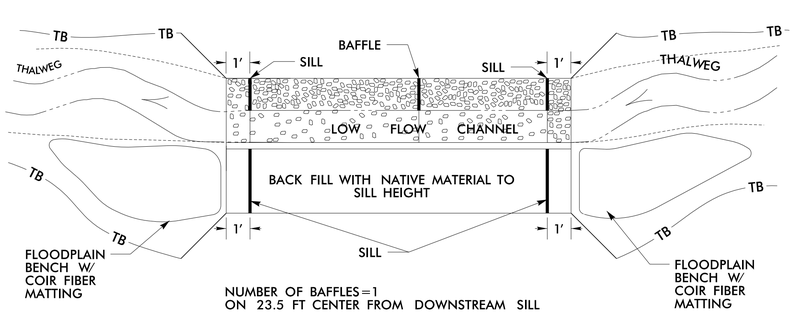

NUMBER OF BAFFLES=1
ON 23.5 FT CENTER FROM DOWNSTREAM SILL

PLAN VIEW

NORTH CAROLINA PROFESSIONAL SEAL 025747 ENGINEER HANDY L. WILLIS
DocuSigned by: Handy L. Willis
12/9/2021

DOCUMENT NOT CONSIDERED FINAL UNLESS ALL SIGNATURES COMPLETED

V&M
Vaughn & Melton
Consulting Engineers
Asheville, North Carolina
828-253-2796
Raleigh, NC 919-977-9455
Charlotte, NC 704-357-0488
Boone, NC 828-355-9933
Tri-Cities, TN 423-467-8401
Knoxville, TN 865-546-5800
Spartanburg, SC 864-574-4775
Charleston, SC 843-974-5650
Middlesboro, KY 606-248-6600
Atlanta, GA 770-627-3509
Copyright © 2006 Vaughn & Melton, Inc. All Rights Reserved

PROJECT NO. B-6032
JACKSON COUNTY
STATION: 12+57.50 -L-
SHEET 6 OF 9

STATE OF NORTH CAROLINA
DEPARTMENT OF TRANSPORTATION
RALEIGH

DOUBLE 11'X5' CULVERT

47° SKEW

DWN. BY: FRJ	DATE: JUNE 2017	
CHKD. BY: HLW	DATE: JUNE 2017	
DES. ENG. OF RECORD: ACO	DATE: JUNE 2017	

REVISIONS

NO.	BY:	DATE:	NO.	BY:	DATE:
1			3		
2			4		

SHEET NO. C-6
TOTAL SHEETS 9